DZ Co. Sienna

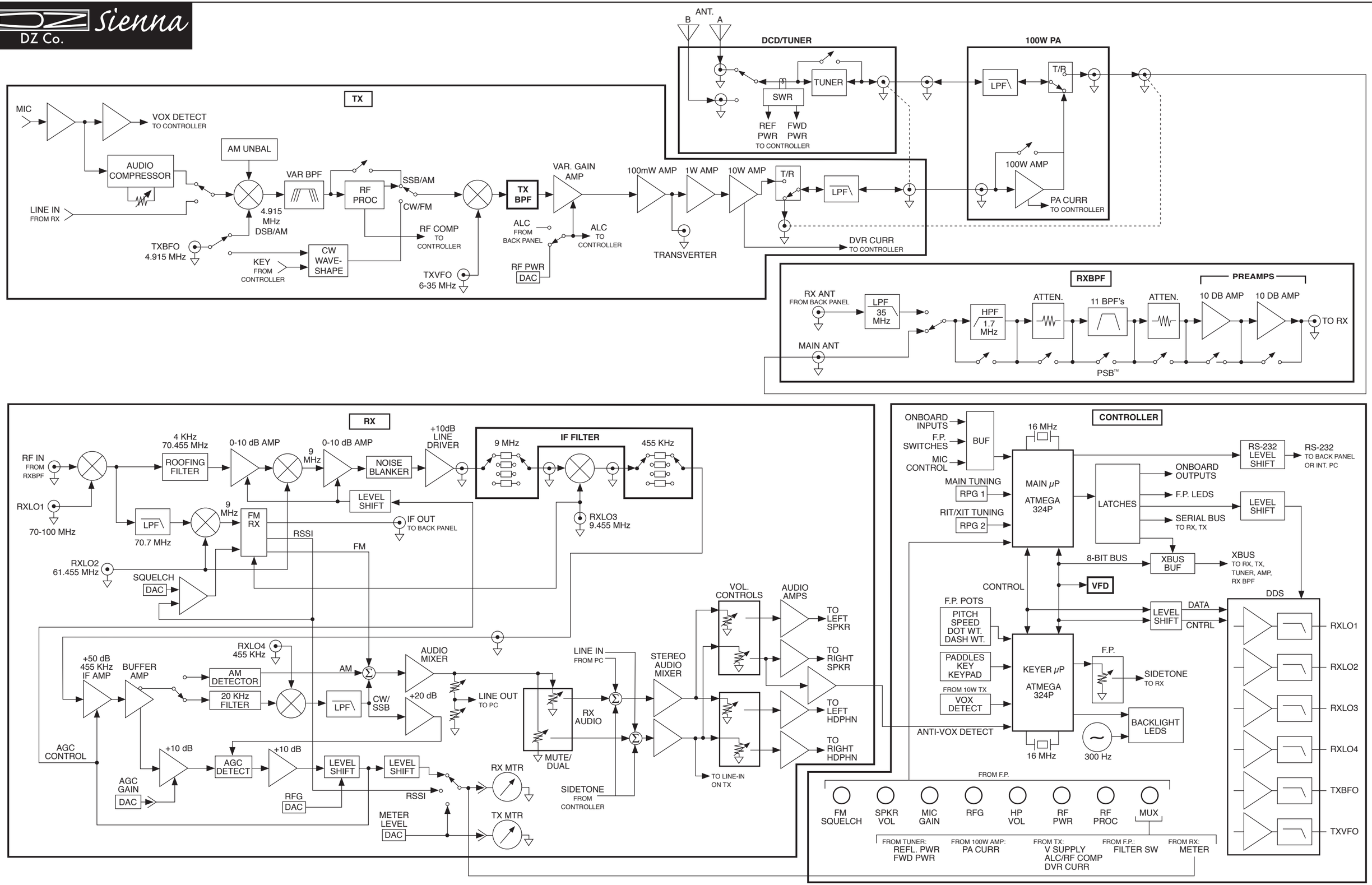
TX
MIC
VOX DETECT TO CONTROLLER
AUDIO COMPRESSOR
LINE IN FROM RX
AM UNBAL
4.915 MHz DSB/AM
TXBFO 4.915 MHz
KEY FROM CONTROLLER
CW WAVE-SHAPE
VAR BPF
RF PROC
SSB/AM
CW/FM
RF COMP TO CONTROLLER
TXVFO 6-35 MHz
TX BPF
ALC FROM BACK PANEL
RF PWR
DAC
VAR. GAIN AMP
ALC TO CONTROLLER
100mW AMP
1W AMP
10W AMP
TRANSVERTER
T/R
LPF
DVR CURR TO CONTROLLER
ANT.
B
A
DCD/TUNER
TUNER
SWR
REF PWR
FWD PWR
TO CONTROLLER
100W PA
LPF
T/R
100W AMP
PA CURR TO CONTROLLER
RXBPF
RX ANT FROM BACK PANEL
LPF 35 MHz
MAIN ANT
HPF 1.7 MHz
ATTEN.
11 BPF's
ATTEN.
PREAMPS
10 DB AMP
10 DB AMP
TO RX
PSB™
RX
RF IN FROM RXBPF
RXLO1
70-100 MHz
4 KHz 70.455 MHz
ROOFING FILTER
0-10 dB AMP
9 MHz
0-10 dB AMP
NOISE BLANKER
+10dB LINE DRIVER
IF FILTER
9 MHz
455 KHz
LEVEL SHIFT
LPF
70.7 MHz
9 MHz
FM RX
RSSI
IF OUT TO BACK PANEL
RXLO3 9.455 MHz
FM
RXLO2 61.455 MHz
SQUELCH
DAC
VOL. CONTROLS
AUDIO AMPS
TO LEFT SPKR
TO RIGHT SPKR
TO LEFT HDPHN
TO RIGHT HDPHN
TO LINE-IN ON TX
RXLO4 455 KHz
+50 dB 455 KHz IF AMP
BUFFER AMP
AM DETECTOR
20 KHz FILTER
AM
AUDIO MIXER
LPF
CW/ SSB
+20 dB
LINE OUT TO PC
LINE IN FROM PC
RX AUDIO
MUTE/ DUAL
STEREO AUDIO MIXER
AGC CONTROL
+10 dB
AGC DETECT
+10 dB
LEVEL SHIFT
LEVEL SHIFT
AGC GAIN
DAC
RFG
DAC
RSSI
RX MTR
METER LEVEL
DAC
TX MTR
SIDETONE FROM CONTROLLER
CONTROLLER
ONBOARD INPUTS
F.P. SWITCHES
MIC CONTROL
BUF
16 MHz
MAIN TUNING
RPG 1
RIT/XIT TUNING
RPG 2
MAIN μP ATMEGA 324P
LATCHES
ONBOARD OUTPUTS
F.P. LEDS
SERIAL BUS TO RX, TX
RS-232 LEVEL SHIFT
RS-232 TO BACK PANEL OR INT. PC
LEVEL SHIFT
8-BIT BUS
XBUS BUF
XBUS TO RX, TX, TUNER, AMP, RX BPF
CONTROL
VFD
F.P. POTS
PITCH SPEED DOT WT. DASH WT.
PADDLES KEY KEYPAD
FROM 10W TX
VOX DETECT
ANTI-VOX DETECT
KEYER μP ATMEGA 324P
16 MHz
LEVEL SHIFT
DATA
CNTRL
F.P.
SIDETONE TO RX
BACKLIGHT LEDS
300 Hz
DDS
RXLO1
RXLO2
RXLO3
RXLO4
TXBFO
TXVFO
FROM F.P.
FM SQUELCH
SPKR VOL
MIC GAIN
RFG
HP VOL
RF PWR
RF PROC
MUX
FROM TUNER: REFL. PWR FWD PWR
FROM 100W AMP: PA CURR
FROM TX: V SUPPLY ALC/RF COMP DVR CURR
FROM F.P.: FILTER SW
FROM RX: METER